Muncie®
Power
Products

# F20 PTO

## PARTS LIST AND SERVICE MANUAL

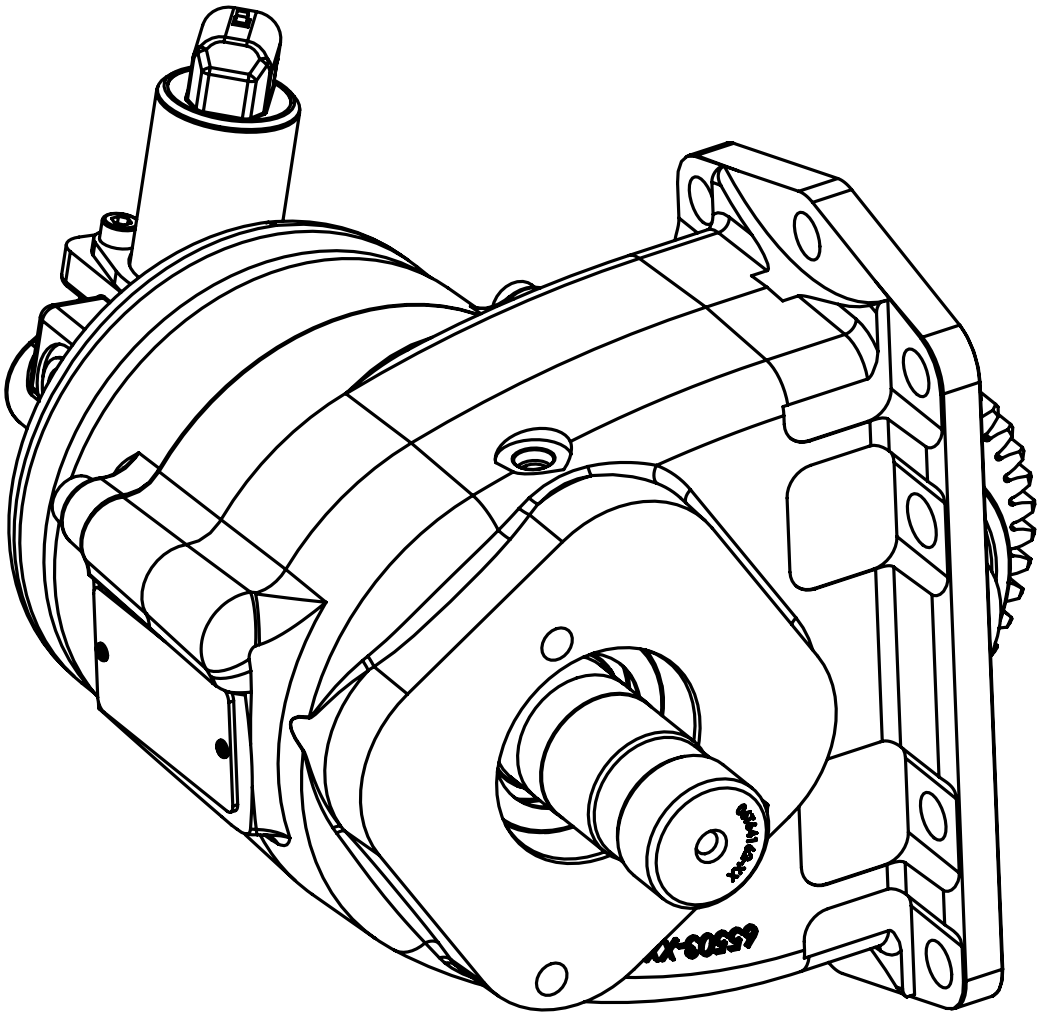

# MODEL NUMBER CONSTRUCTION

**F20-F13 12 GX 5 TN PX**

**PTO Series**
F20— Ford

**Transmission Gear**
F13— Ford 10R140

**Internal Speed Ratio**
12 — 1.18:1

**Shift Type**
GX — Gas Engine Standard
GS — Gas Engine **Muncie Start®**
DX — Diesel Engine Standard
DS — Diesel Engine **Muncie Start®**
RX — Reduced Harness (Wiring Pigtails Only)
RS — Reduced Harness **Muncie Start®**

**Special Features**
PX — Single Mode
(Either Stationary **OR** Mobile)
PB — Dual Mode
(Both Stationary **AND** Mobile)

**Output Type**
1X — 1¼" Round Shaft (Standard)
BA — SAE "B" ⅞" 13T Shaft; SAE-"A" 2-Bolt Flange
TN — ¾" 11T Shaft; MPP "N" Mount (Standard)
TA — ¾" 11T Shaft; SAE-"A" 2-Bolt Flange
UU — ISO 14 25mm 8T Shaft; 21 UNI 222 3-Bolt Flange

**Assembly Arrangement**
5 – No Offset (Straight Out From Opening)

| OTHER F20 LITERATURE | |
|---|---|
| IN17-04 | All PTOs Operator's Manual ES |
| IN17-14 | Muncie Start® Ford Installation Sheet ES |
| IN19-04 | F20 10-Bolt Installation Instructions ES |
| IN19-05 | F20 10-Bolt Activation Instructions ES |
| IN19-07 | F20 10-Bolt PTO Activation Instructions ("R" Shift) |
| IN20-04 | F20 Rebuild Instructions |

# DIMENSIONS

## TA OUTPUT — ¾" -11T SHAFT, SAE “A” 2-BOLT FLANGE
## BA OUTPUT — ⅞" -13T SHAFT, SAE “A” 2-BOLT FLANGE

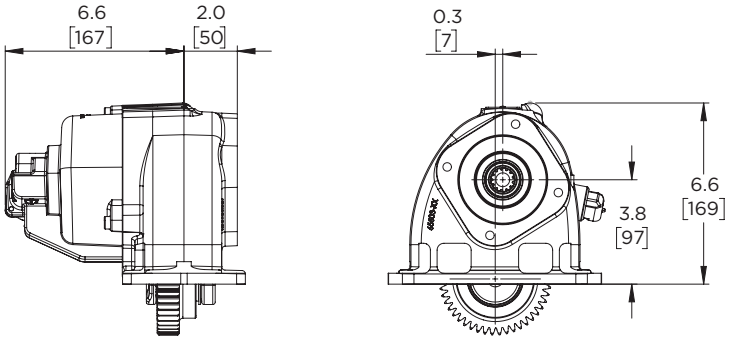


## TN OUTPUT — MPP “N” MOUNT 2-BOLT FLANGE

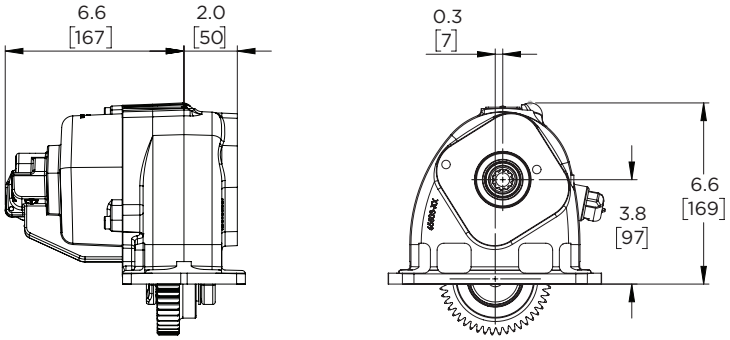


## 1X OUTPUT — 1¼" ROUND KEYED SHAFT

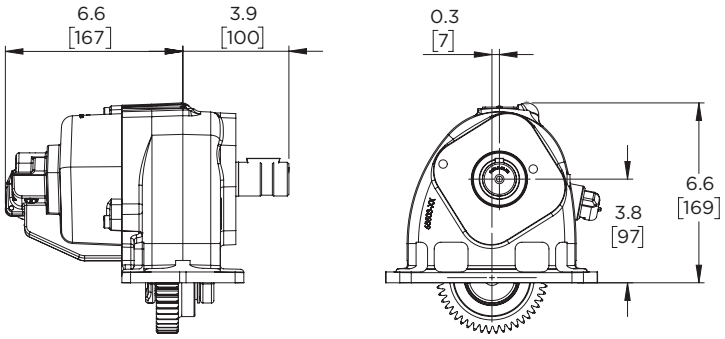


## UU OUTPUT — UNI 222 MOUNT 3-BOLT FLANGE

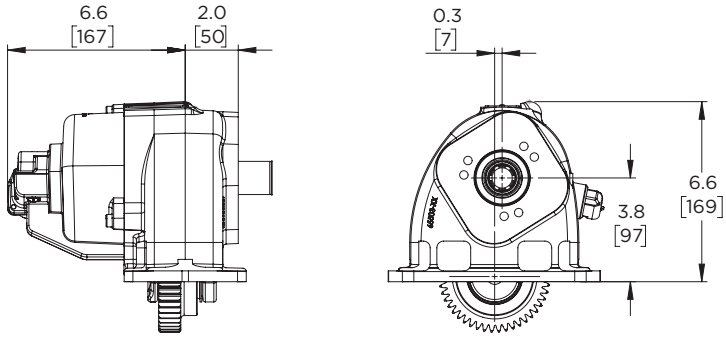

# F20 EXPLODED VIEWS

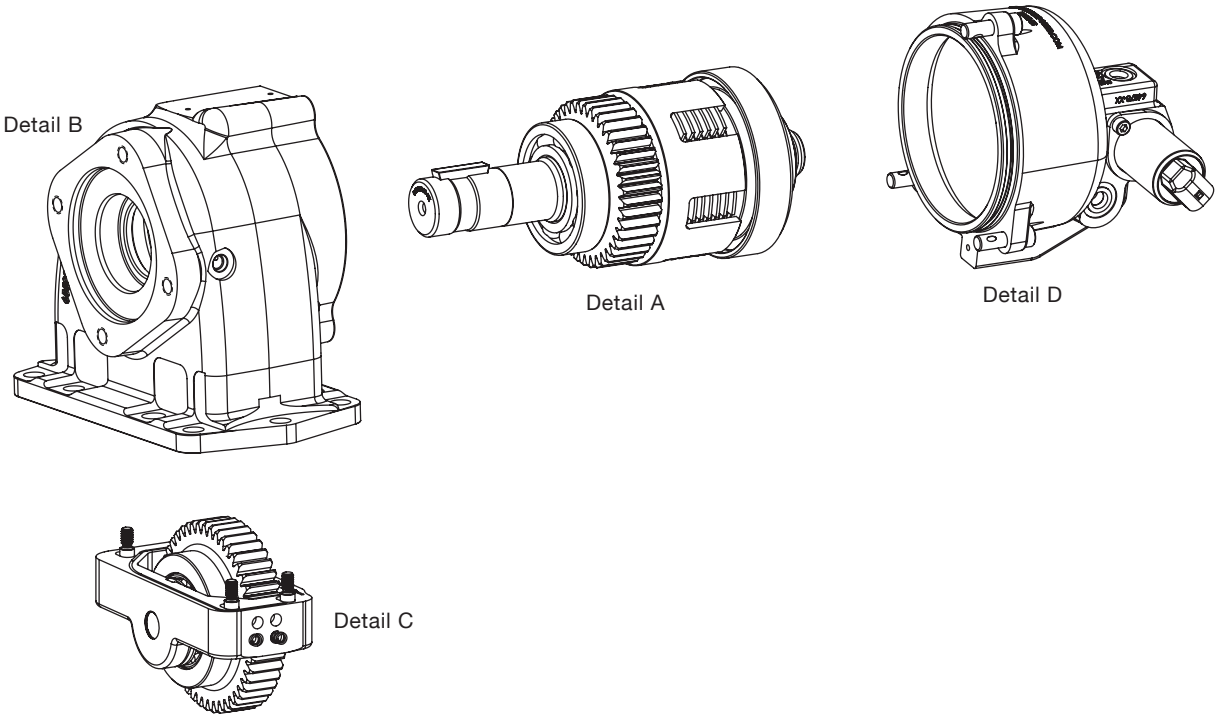


# DETAIL A – OUTPUT SHAFT ASSEMBLY

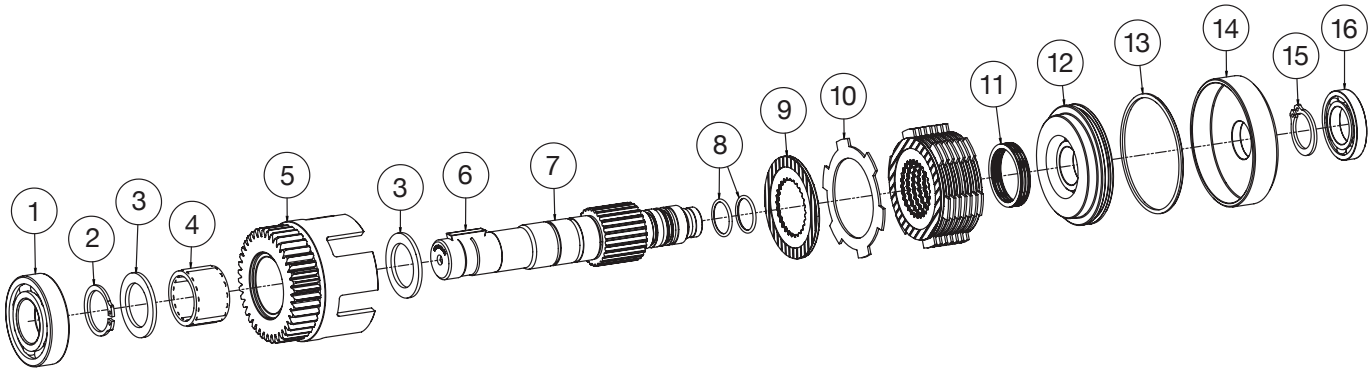


| ITEM | QTY. | PART NO. | DESCRIPTION |
|---|---|---|---|
| 1 | 1 | 10T21017 | Bearing |
| 2 | 1 | 24T36470 | Snap Ring, Output |
| 3 | 2 | 21T62472 | Thrust Washer |
| 4 | 1 | 10T62471 | Needle Bearing |
| 5 | 1 | 02T65196 | Output Gear |
| 6 | 1 | 26T01627 | Woodruff Key – 5⁄16" |
| 7 | 1 | 06TA6478 | Output Shaft: 1¼" rd., 5⁄16" Key |
| | | 06TA6472 | Output Shaft: ¾" -11T |
| | | 06TA6477 | Output Shaft: ⅞" -13T |
| | | 06TA6630 | Output Shaft: UNI |

| ITEM | QTY. | PART NO. | DESCRIPTION |
|---|---|---|---|
| 8 | 2 | 12T39023 | O-Ring |
| 9 | 9 | 49T65367 | Friction Disc |
| 10 | 8 | 49T36258 | Spacer Disc |
| 11 | 1 | 27T61827 | Piston Return Spring |
| 12 | 1 | 49T64056 | Piston |
| 13 | 1 | 12T64059 | Piston O.D. O-Ring |
| 14 | 1 | 49T64057 | Piston Cup |
| 15 | 1 | 24T39182 | Snap Ring |
| 16 | 1 | 10T39072 | Bearing |

# DETAIL B – HOUSING ASSEMBLY

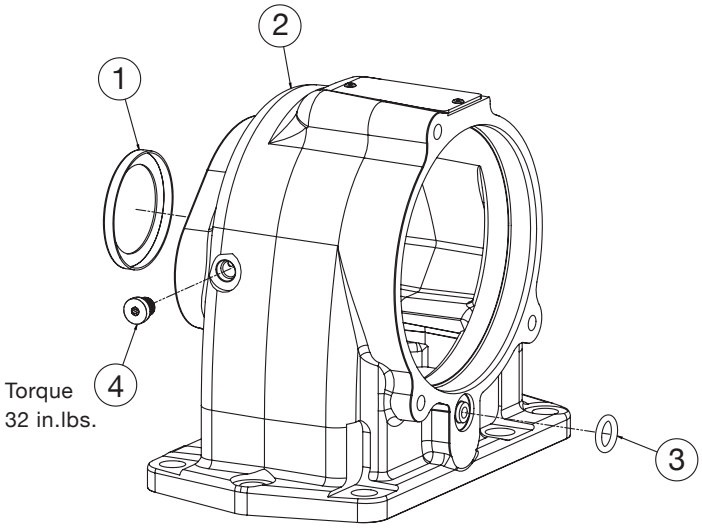


| ITEM | QTY. | PART NO. | DESCRIPTION |
|---|---|---|---|
| 1 | 1 | 11T63830 | Shaft Seal |
| 2 | 1 | 01T64815 | Housing: “TN” |
| | | 01TA6476 | Housing: “BA”, “TA”, “1X” |
| | | 01TA6613 | Housing: “UU” |
| 3 | 1 | 12T36878 | O-Ring |
| 4 | 1 | 25T65492 | ORB Plug (Not used on “TN”) |

# DETAIL C – INPUT ASSEMBLY

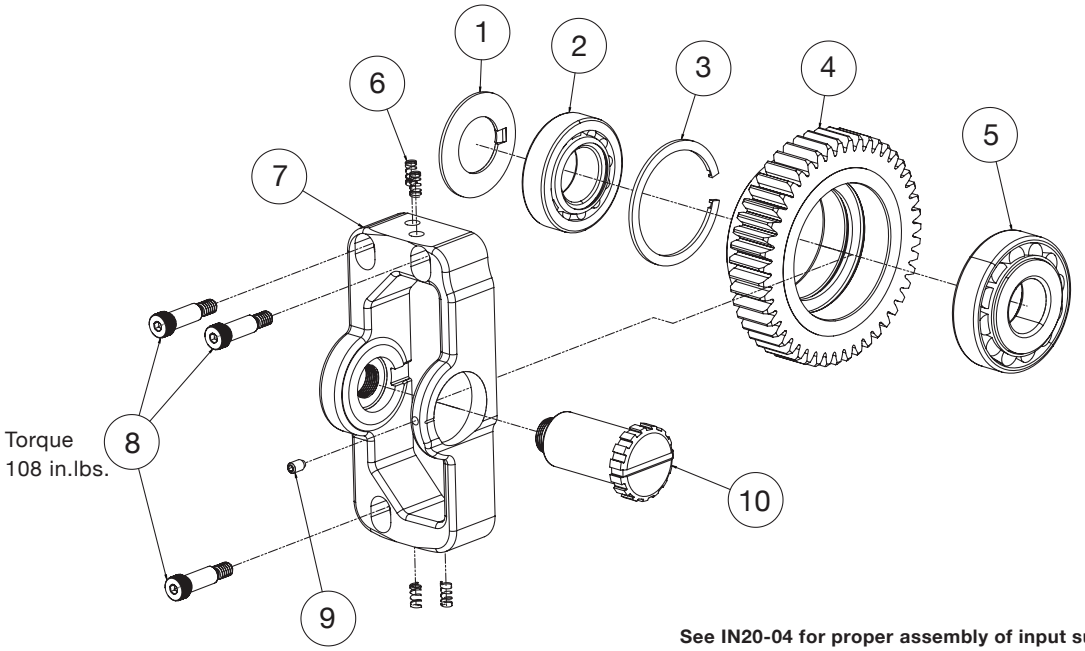


**See IN20-04 for proper assembly of input subassembly**

| ITEM | QTY. | PART NO. | DESCRIPTION |
|---|---|---|---|
| 1 | 1 | 21T62316 | Tabbed Washer |
| 2 | 1 | 10T65008 | Bearing |
| 3 | 1 | 24T65083 | Snap Ring |
| 4 | 1 | 03T64153 | Input Gear (47 Tooth) |
| 5 | 1 | 10T65009 | Bearing |

| ITEM | QTY. | PART NO. | DESCRIPTION |
|---|---|---|---|
| 6 | 4 | 27T63431 | Coil Spring |
| 7 | 1 | 49T64798 | Carrier |
| 8 | 3 | 19T65081 | Shoulder Bolt |
| 9 | 1 | 19T36846 | Set Screw |
| 10 | 1 | 07T64145 | Input Shaft |

# DETAIL D – REAR COVER ASSEMBLY

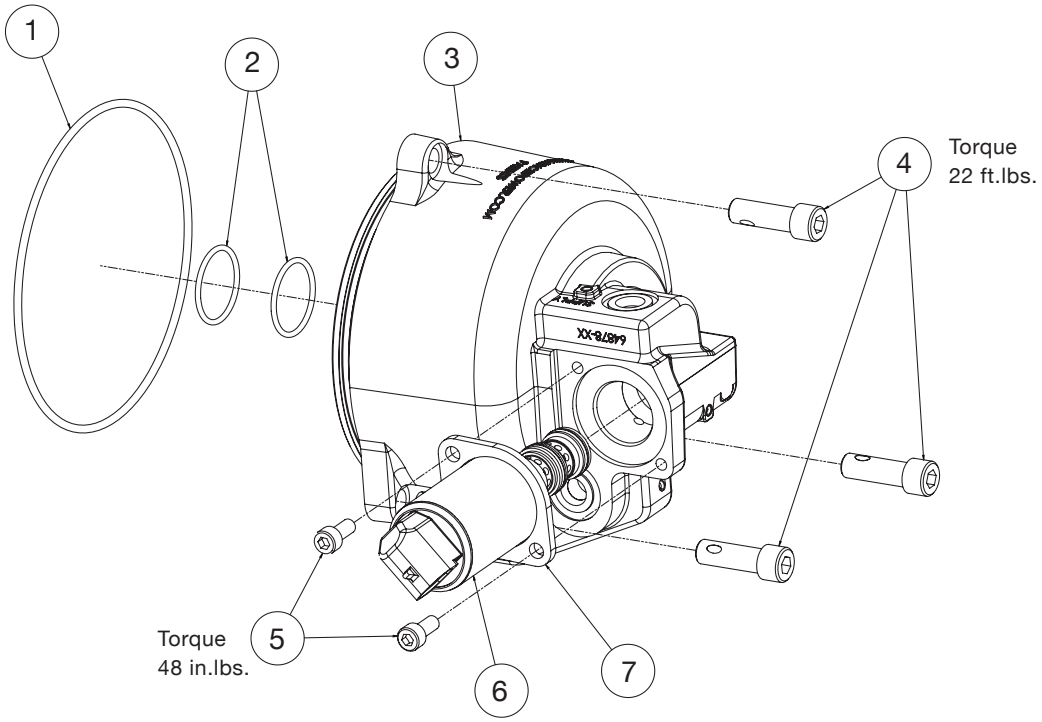


| ITEM | QTY. | PART NO. | DESCRIPTION |
|---|---|---|---|
| 1 | 1 | 12T36872 | O-Ring |
| 2 | 2 | 12T36280 | O-Ring |
| 3 | 1 | 15TA6474 | Cover, Standard |
| | | 15TA6475 | Cover, Muncie Start® |
| 4 | 3 | 19T36588 | Capscrew |

| ITEM | QTY. | PART NO. | DESCRIPTION |
|---|---|---|---|
| 5 | 2 | 19T62950 | Cap Screw |
| 6 | 1 | 35T43600 | Solenoid Valve |
| | | 35T62496 | Solenoid Valve (Muncie Start®) |
| 7 | 1 | 49T62436 | Solenoid Clamp Ring |

| PART NO. | DESCRIPTION | F20GSK (GASKET KIT) | F20RBK (REBUILD KIT) |
|---|---|---|---|
| | | QTY. | QTY. |
| 10T21017 | Bearing | - | 1 |
| 10T39072 | Bearing | - | 1 |
| 10T62471 | Needle Bearing | - | 1 |
| 10T65008 | Bearing | - | 1 |
| 10T65009 | Bearing | - | 1 |
| 11T63830 | Shaft Seal | 1 | 1 |
| 12T36280 | O-Ring | 2 | 2 |
| 12T36872 | O-Ring | 1 | 1 |
| 12T36878 | Housing O-Ring | 1 | 1 |
| 12T39023 | O-Ring | 2 | 2 |
| 12T64059 | Piston O.D. O-Ring | 1 | 1 |
| 13T64490 | Gasket | 1 | 1 |
| 21T62472 | Thrust Washer | - | 2 |
| 21T62316 | Tabbed Washer | - | 1 |
| 24T36470 | Snap Ring, Output | - | 1 |
| 24T39182 | Snap Ring | - | 1 |
| 24T65083 | Snap Ring | - | 1 |
| 27T61827 | Piston Return Spring | - | 1 |
| 27T63431 | Coil Spring | - | 4 |
| 49T36258 | Spacer Disc | - | 8 |
| 49T35367 | Friction Disc | - | 9 |

# INSTALLATION KITS

| PART NO. | DESCRIPTION | QUANTITY IN KIT | | | | |
|---|---|---|---|---|---|---|
| | | 48TK6501 DIESEL (SINGLE) D*-5**PX | 48TK6502 DIESEL (DUAL) D*-5**PB | 48TK6503 GAS (SINGLE) G*-5**PX | 48TK6504 GAS (DUAL) G*-5**PB | 48TK6516 "R" Shift R*-5**PX |
| 13T64490 | Gasket | 1 | 1 | 1 | 1 | 1 |
| 19T64695 | PTO Mounting Bolt | 7 | 7 | 7 | 7 | 7 |
| 20T64143 | M10 × M8 Stud | 2 | 2 | 2 | 2 | 2 |
| 21T64303 | Flat Washer | 7 | 7 | 7 | 7 | 7 |
| 22T65300 | M8 Nut | 2 | 2 | 2 | 2 | 2 |
| 28T35442 | Cable Tie | 6 | 6 | 6 | 6 | - |
| 30T35687 | Rocker Switch - Single Mode (PX) | 1 | - | 1 | - | - |
| 30T41975 | Rocker Switch - Dual Mode (PB) | - | 1 | - | 1 | - |
| 30T60223 | Pressure Switch | 1 | 1 | 1 | 1 | 1 |
| 32MSR12V | 12V Red Light | - | 1 | - | 1 | - |
| 34T43730 | Wire Harness - Diesel Single (PX) | 1 | - | - | - | - |
| 34T44005 | Wire Harness - Diesel Dual (PB) | - | 1 | - | - | - |
| 34T43735 | Wire Harness - Gas Single (PX) | - | - | 1 | - | - |
| 34T44000 | Wire Harness - Gas Dual (PB) | - | - | - | 1 | - |
| 34T42527 | Wire Harness - R Shift (R*) | - | - | - | - | 1 |
| 36MK5660 | Switch Kit Bolts | 1 | 1 | 1 | 1 | - |
| 36T42362 | Bracket | 1 | 1 | 1 | 1 | - |
| 36T42380 | Face Plate - Single Mode (PX) | 1 | - | 1 | - | - |
| 36T42383 | Face Plate - Dual Mode (PB) | - | 1 | - | 1 | - |
| 37T35674 | Grommet | 1 | 1 | 1 | 1 | - |
| 43T42792 | 90° Elbow (PTO) | 1 | 1 | 1 | 1 | 1 |
| 43T65280 | 90° Elbow (Trans) | 1 | 1 | 1 | 1 | 1 |
| 45T65570 | Hose Assembly | 1 | 1 | 1 | 1 | 1 |
| 48TK6545 | Label Kit | 1 | 1 | 1 | 1 | 1 |

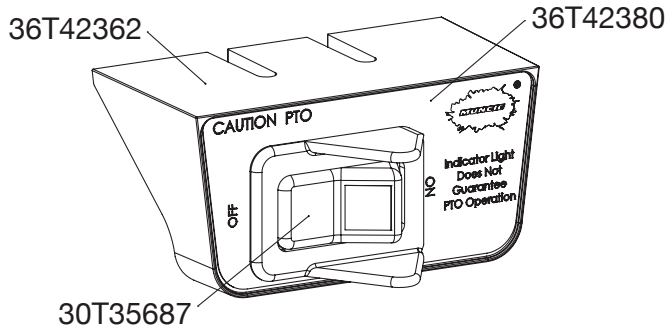


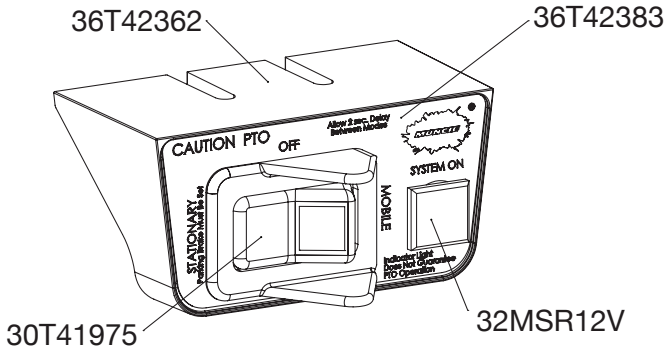


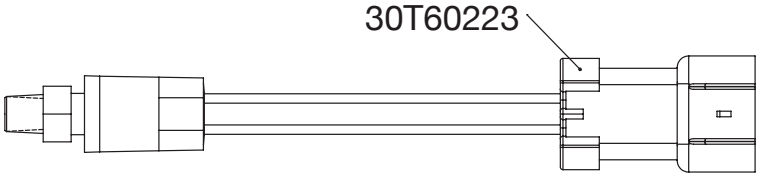

# WIRING HARNESSES

## Dual Mode Harnesses (PB)

### 34T44005

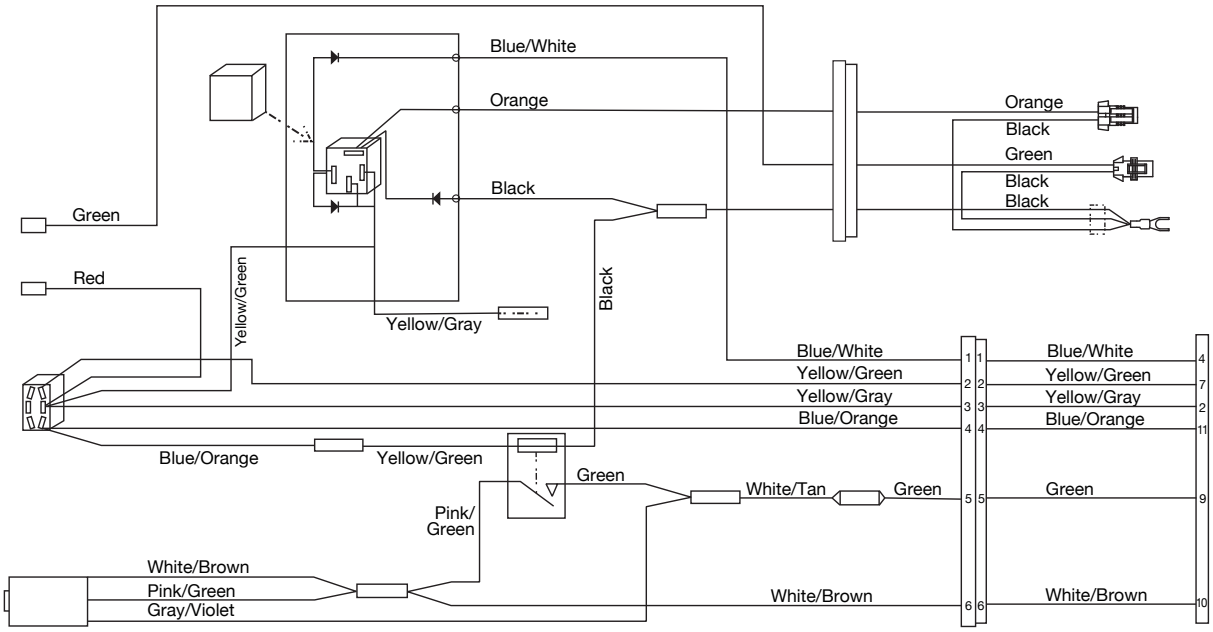


### 34T44000

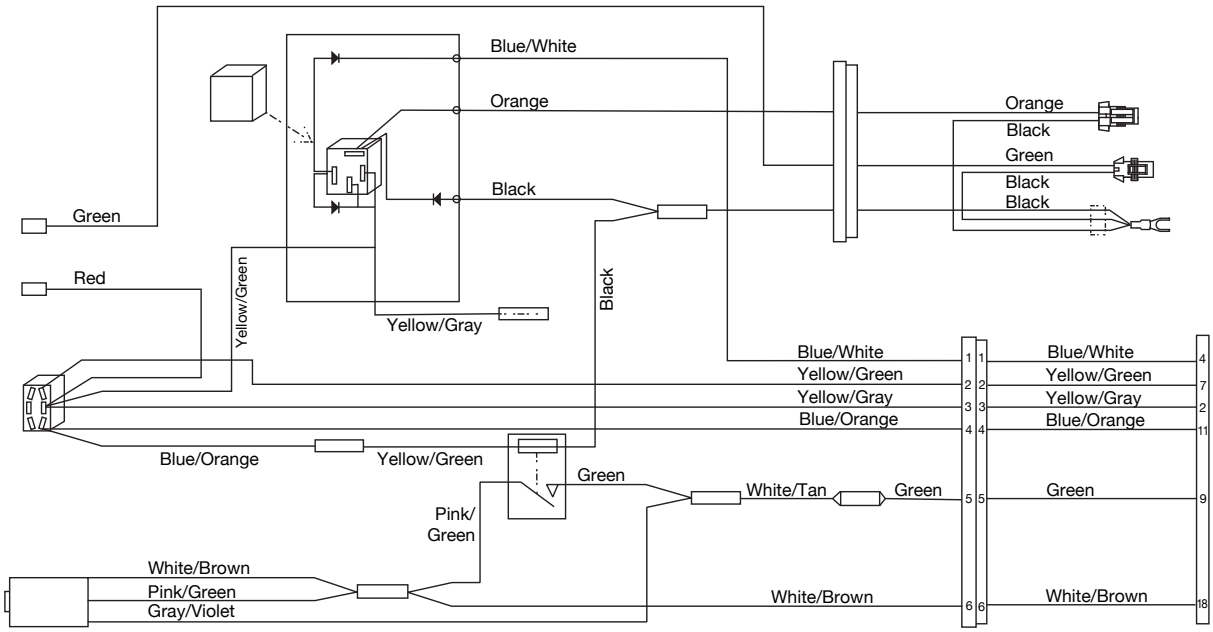


### Diesel (34T44005)

| MUNCIE HARNESS COLOR | FORD WIRE COLOR | PIN# |
|---|---|---|
| White/Brown | White/Brown | 10 |
| Green | Green | 9 |
| Yellow/Green | **STATIONARY** - Yellow/Green | 7 |
| Blue/Orange | **MOBILE** - Blue/Orange | 11 |
| Blue/White | Blue/White | 4 |
| Yellow/Gray | Green/Orange | 2 |

### Gas (34T44000)

| MUNCIE HARNESS COLOR | FORD WIRE COLOR | PIN# |
|---|---|---|
| White/Brown | Yellow/Green | 18 |
| Green | Green | 9 |
| Yellow/Green | **STATIONARY** - Yellow/Green | 7 |
| Blue/Orange | **MOBILE** - Blue/Orange | 11 |
| Blue/White | Blue/White | 4 |
| Yellow/Gray | Green/Orange | 2 |

**NOTE:** For replacement Wiring Pigtails kit use **34T42527**.

# SINGLE MODE HARNESS (PX)

## 34T43730-01

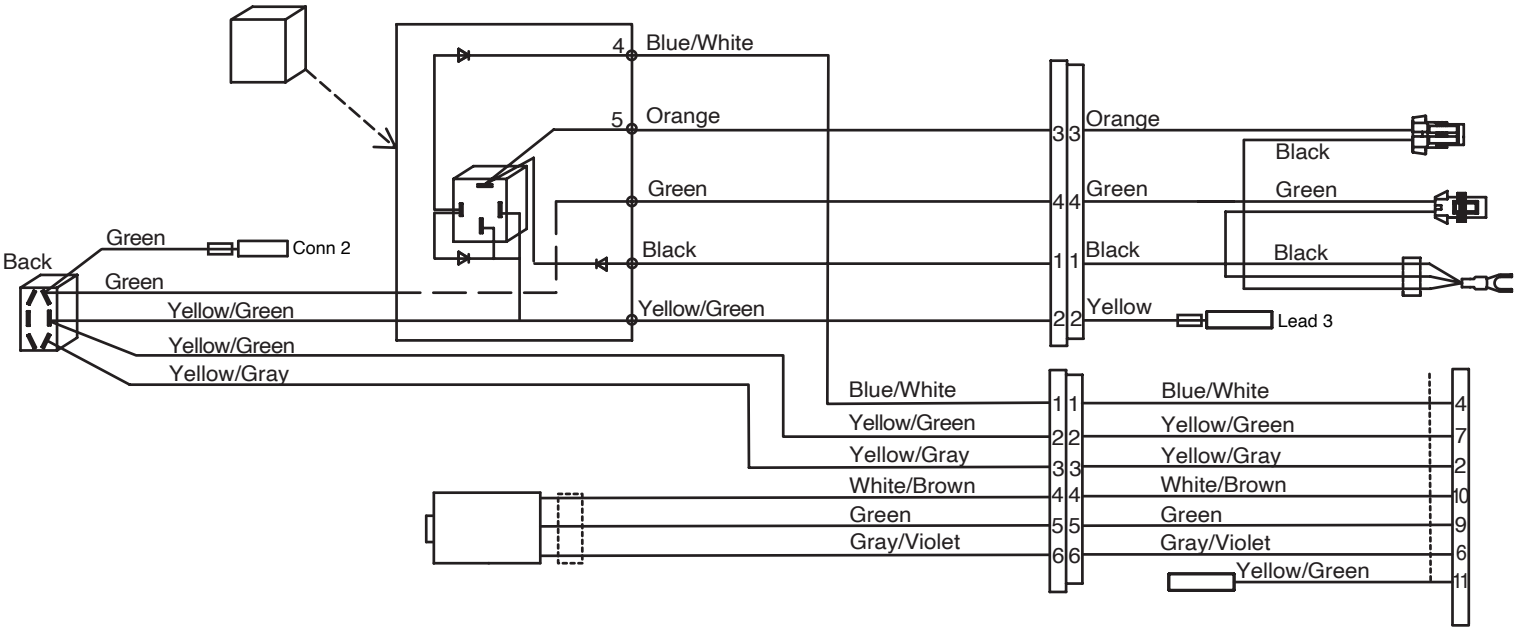


## 34T43735-01

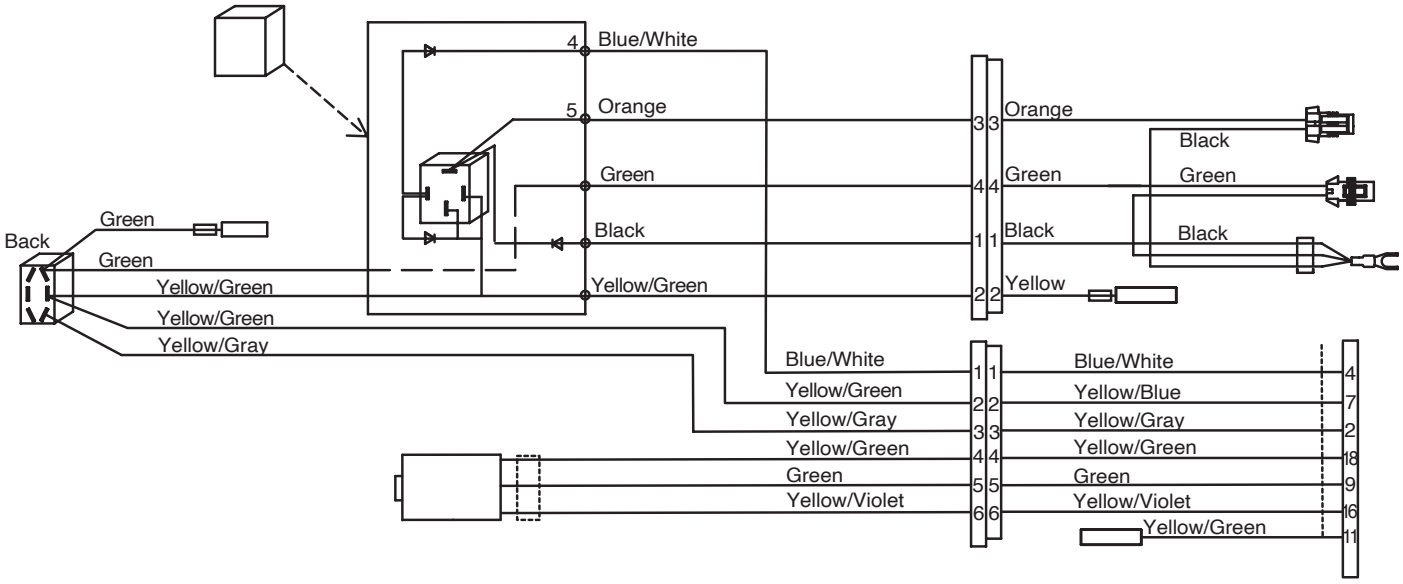


### Diesel (34T43730)

| MUNCIE HARNESS COLOR | FORD WIRE COLOR | PIN# |
|---|---|---|
| White/Brown | White/Brown | 10 |
| Green | Green | 9 |
| Yellow/Green | **STATIONARY** - Yellow/Green | 7 |
| | **MOBILE** - Blue/Orange | 11 |
| Gray/Violet | Gray/Violet | 6 |
| Blue/White | Blue/White | 4 |
| Yellow/Gray | Green/Orange | 2 |

### Gas (34T43735)

| MUNCIE HARNESS COLOR | FORD WIRE COLOR | PIN# |
|---|---|---|
| Yellow/Green | Yellow/Green | 18 |
| Green | Green | 9 |
| Yellow/Blue | **STATIONARY** - Yellow/Green | 7 |
| | **MOBILE** - Blue/Orange | 11 |
| Yellow/Violet | Yellow/Violet | 16 |
| Blue/White | Blue/White | 4 |
| Yellow/Gray | Green/Orange | 2 |

**NOTE:** For replacement Wiring Pigtails kit use **34T42527**.

# R SHIFT HARNESS (R*)

## 34T42527 (Includes both pigtail assemblies)

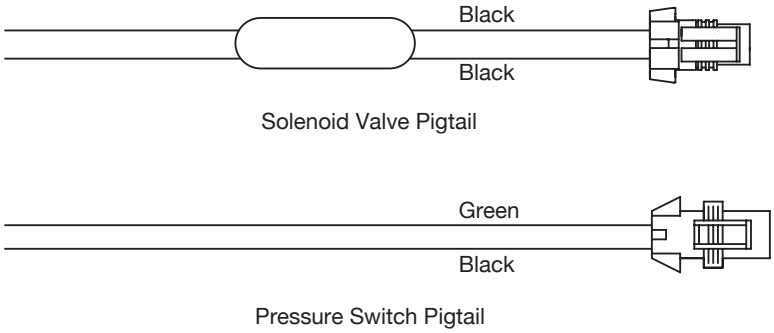


# MUNCIE START KIT PARTS LIST

(**GS**, **DS**, and **RS** Shift ONLY; Connects to included Wire Harness)

## 48TK6508

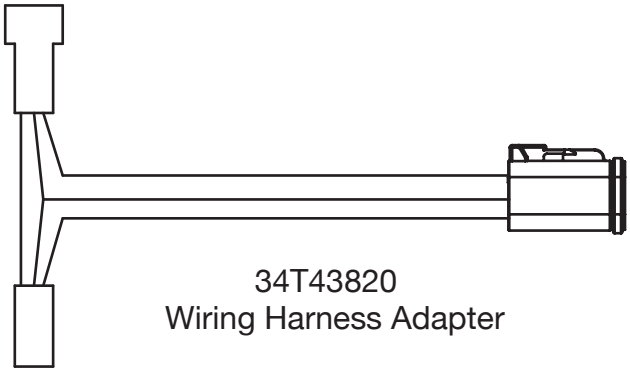

34T43820
Wiring Harness Adapter

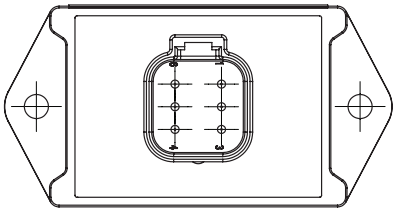

38T63053
Module

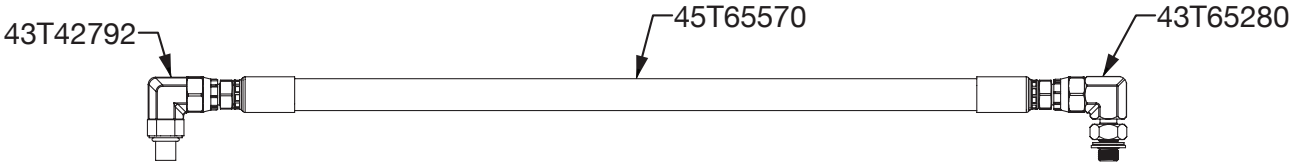


PTO Side

Transmission Side

# BOLT KIT – 20TK6546

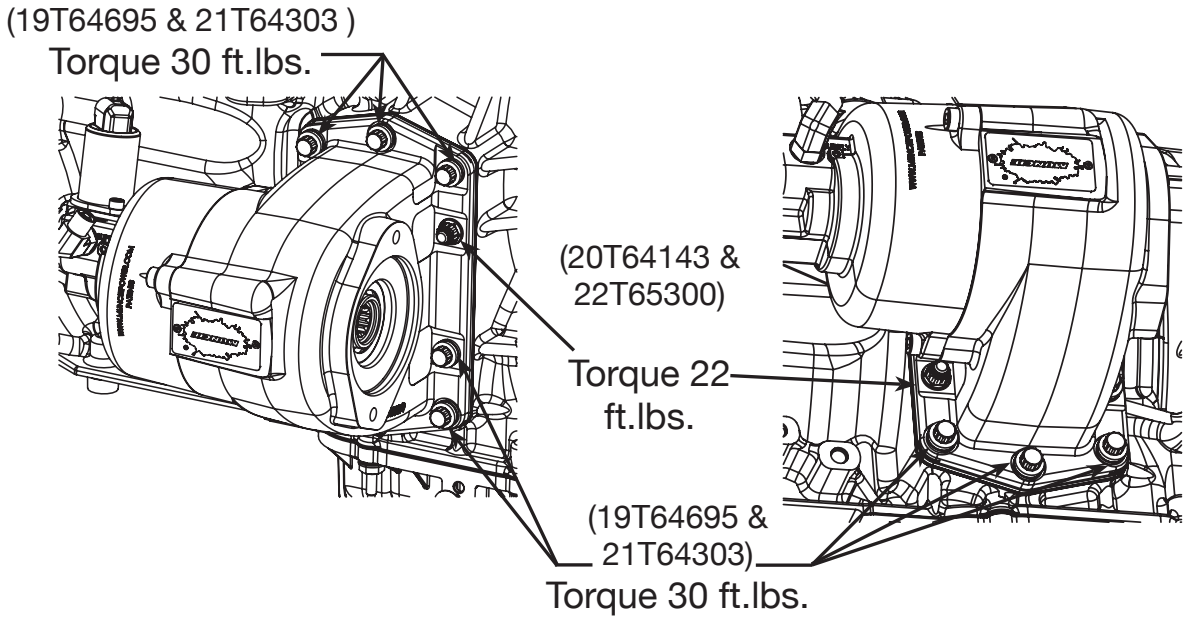


| QTY. | PART NO. | DESCRIPTION |
|---|---|---|
| 7 | 19T64695 | PTO Mounting Bolt |
| 7 | 21T64303 | Flat Washer |
| 2 | 20T64143 | M10 × M8 Stud |
| 2 | 22T65300 | M8 Nut |

# ORIENTATION FOR GASKET (13T64490)

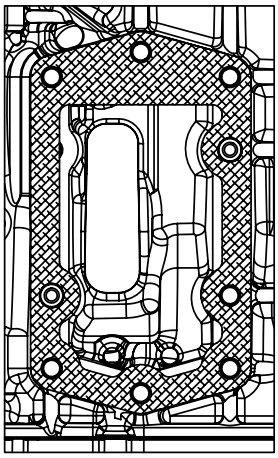

# "UU" OUTPUT PUMP MOUNTING KIT – 48TK6631

| QTY. | PART NO. | DESCRIPTION |
|---|---|---|
| 1 | 12901552000 | Gasket |
| 3 | 19M15002 | Cap Screw |
| 4 | 21T20526 | Lock Washer |

Muncie® Power Products

*A Member of the Interpump Group*

201 East Jackson Street, Muncie, Indiana 47305
800-367-7867 • Fax: 765-284-6991 • info@munciepower.com

Specifications are subject to change without notice. Visit www.munciepower.com for warranties and literature. All rights reserved. © Muncie Power Products, Inc. (2020)

SP19-09 (Rev. 07-25)